SCHUBERT SALZER

Schubert & Salzer - Your Partner for Metallurgy

Benefit from our experience to increase your success!

When it comes to the production and processing of metals having the right valve in the right place is essential if things are to run smoothly. The requirements may vary depending on where a valve is used, but they are always high: process-stability, long-lasting life time, easy maintenance and precise control are just a few examples.

With Schubert & Salzer Control Systems valves, you can be sure you have made the right choice. We have many years of experience as the trusted partners of a broad range of companies working in your industry. The range of applications is wide. For example, our valves control very precisely gases in burner installations in primary and secondary metallurgy or in alloying and galvanising processes as well as cooling water in continuous casting plants.

Further applications can be found in gas cleaning for denitrification with ammonia or in quenching flue gases.

Valves from Schubert & Salzer are used in steam applications for vacuum systems and blast furnaces, for abrasive media such as coal powder or ore slag, in blowing systems as well as in mold cooling and in hot or cold rolling systems.

Whatever the challenges in your process might be, you can rely on us to be a competent partner at your side. We don't just sell you an off-the-shelf product; we offer you a solution which is designed to fit your individual requirements.

Benefit from our experience to increase your success!

Sliding gate control valves

The GS-Valve and its applications – See the movie at:
controlsystems.schubert-salzer.com/en/gs-film

When it comes to precise control of liquid and gaseous media, sliding gate valves are particularly suitable. They prove to be a superior alternative to globe valves – even at very high or low temperatures, high pressures, if rapid switching actions, a high degree of control precision or rangeability are needed. Users appreciate the significantly lower consumption of energy due to the smaller actuator and extremely short valve stroke of 6-9 mm. Typical applications are control of O_2/natural gas in burner systems, cooling water control in continuous casting and rolling processes; the control of N_2 for inerting, argon flushing in alloying, as well as air regulation for zinc thickness adjustment on strip galvanizing plants or ammonia control for denoxification. The extremely rapid opening times of sliding gate valves enabling very high switching frequencies are ideal for the pulsed injection of oxygen in cupola and blast furnaces.

Summary of your benefits:

- Compact construction and simple installation.
- 10 times less actuation force reduces energy consumption and is kinder for the climate and environment.
- Highest quality control performance and high rangeability thanks to the smart positioner; fast reaction times due to the short stroke also if motor actuated!
- When used as stop valve, valve opening times of less than 0,002 seconds can be reached! (e.g. for O_2 pulsing)
- Very simple servicing by exchanging the easily accessible disc pair.
- Minimal spare parts requirements.
- Compact, integrated positioner without permanent pilot air consumption.
- It is easy to optimise or adjust the regulation as the C_{VS} values can be altered simply by exchanging the fixed disc.
- Short strokes reduce internal wear and tear and extend the life of the part.
- Minimised wear and tear in cavitation applications due to optimised flow guidance.
- Maintenance-friendly replacement of the integrated positioner. Smart diagnostics software in the positioner as a valuable aid.
- Low heat or cooling loss due to a reduced body surface.
- Reduced noise emissions.
- A complete stainless-steel version is available.

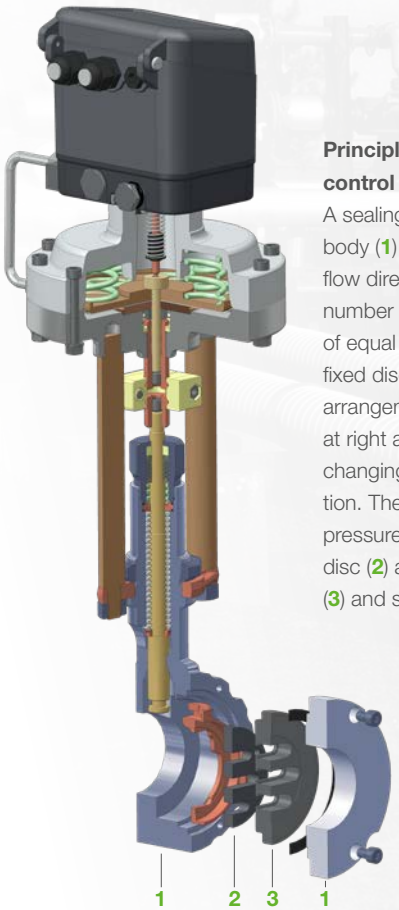

Principle of the sliding gate control valve:
A sealing plate (**3**) fixed in the body (**1**) at right angles to the flow direction has a certain number of crossways slots of equal height. A rotationally fixed disc (**2**) with the same arrangement of slots is moved at right angles to this, thereby changing the flow cross section. The prevailing differential pressure presses the moving disc (**2**) against the fixed disc (**3**) and seals it.

Size comparison between a normal seat valve and a Schubert & Salzer sliding gate valve at identical nominal sizes.

Seat Valves

Angle seat valves in the form of on/off and control units offer a particularly compact construction and perform a very high number of switch cycles. In its many versions, the construction of the valve gives a highly efficient flow rate and can even be used in lightly contaminated media. They are available with a threaded connection as well as with welding ends or flanges. Actuation is either pneumatic or electric.

The seat valves are ideal when liquid and gaseous media need to be shut off securely and without closing impact. Gases principally used in metallurgy include O_2, H_2, natural gas, argon and N_2. Also water, oils, fuels, emulsions, chemicals or even steam are used. A special application in foundries is the shooting of cores or the compaction of the sand in molding plants using compressed air.

Summary of your benefits:

- Long service life with over 1 million switch cycles and highly leakproof even with slightly contaminated media.
- Very simple to maintain: when servicing the valve, the body can remain in the pipe. The actuator with valve plug can easily be unscrewed.
- This uncomplicated method of servicing also enables an advantageous and space-saving construction with welding ends, ensuring no leaking at the connections.
- Flexible pilot air connection thanks to an actuator bonnet which can rotate 360°.
- Every part of the valve is available as a replacement part.
- A temperature range of -100 °C to 220 °C is possible. Oil- and grease-free versions are available.
- Available in nominal sizes DN 8 to DN 80, up to pressure rating PN40.
- Wide variety of material combinations including a complete stainless-steel option.
- Easy handling and reduced storage: The identic valve body is the basis for line strainers, check valves, manual valves, pneumatic valves and control valves.
- Schubert & Salzer seat valves are non-sensitive to slightly contaminated media and are superior to solenoid valves.
- Large variety of special solutions available.
- DVGW-Certificates DIN EN 161 and DIN EN 16678

Ball sector valves

Schubert & Salzer's ball sector valves have proved themselves particularly as control valves for abrasive, particle-loaded, dusty, viscous and crystallising media. Due to their especially designed ball sectors they are self-cleaning. They are precisely controlled by electric actuators and pneumatic actuators with top-mounted positioners.

Typical applications include controlling the supply of coal powder to furnaces, of air in galvanizing plants and of contaminated water in mold cooling, as well as in the spray cooling in hot and cold rolling mills with high rangeability.

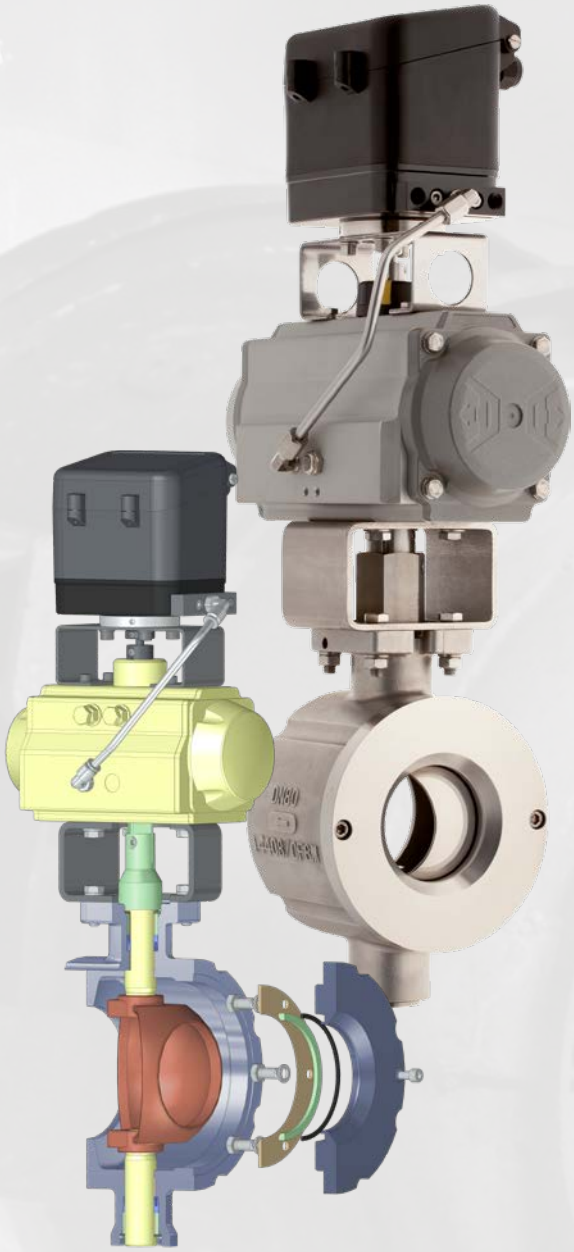

Summary of your benefits:

- Compact construction, simple installation.
- Elliptical cross section of the ball guarantees minimal wear, seal area lies outside control edge.
- The combination of central bearing and seat ring/O-ring wipes particles off the seat and prevents their accumulation between ball and valve seat.
- The special ball design provides self-cleaning when crystallisation and build-ups occur.
- Highest control level with a rangeability of 300:1.
- Bi-directional flow possible.
- Material combination tailored to the application.
- Hard chrome plating and stellite seats for highly abrasive applications.
- TA Luft-certified shaft seal possible by double O-ring design.
- Low actuation forces.
- Modular design of pneumatic and electric actuators, also available in Ex-version.

SCHUBERT SALZER

Germany
Schubert & Salzer
Control Systems GmbH
Bunsenstraße 38
85053 Ingolstadt
Germany

Phone: +49 841 96 54-0
Fax: +49 841 96 54-5 90
info.cs@schubert-salzer.com

Benelux
Schubert & Salzer
Benelux BV
Gaston Crommenlaan (Zuiderpoort) 8
9050 Gent
Belgium
Phone Belgium: +32 / 9 / 334 54 62
Fax Belgium: +32 / 9 / 334 54 63
info.benelux@schubert-salzer.com
Phone Netherlands: +31 / 85 / 888 05 72
info.nl@schubert-salzer.com
Phone Luxembourg: +352 / 20 / 880 643
info.lux@schubert-salzer.com

France
Schubert & Salzer
France SARL
291, rue Albert Caquot
CS40095
06902 Sophia-Antipolis Cedex
France
Phone: +33 / 492 94 48 41
Fax: +33 / 493 95 80 52
info.fr@schubert-salzer.com

United Kingdom
Schubert & Salzer
UK Limited
140 New Road
Aston Fields
Bromsgrove
Worcestershire
B60 2LE
United Kingdom
Phone: +44 / 19 52 / 46 20 21
Fax: +44 / 19 52 / 46 32 75
info@schubert-salzer.co.uk

India
Schubert & Salzer
Private Limited
1206, Lodha Supremus,
Senapati Bapat Marg, Upper Worli,
Opp. Lodha World Tower
Lower Parel (W)
Mumbai 400 013
India
Phone: +91 / 77 38 15 46 61
info.india@schubert-salzer.com

United States of America
Schubert & Salzer Inc.
4601 Corporate Drive NW
Suite 100
Concord, N.C. 28027
United States of America
Phone: +1 / 704 / 789 - 0169
Fax: +1 / 704 / 792 - 9783
info@schubertsalzerinc.com
www.schubertsalzerinc.com

www.schubert-salzer.com